Cam Unit - PCU - CS2.1-80-(60-70)

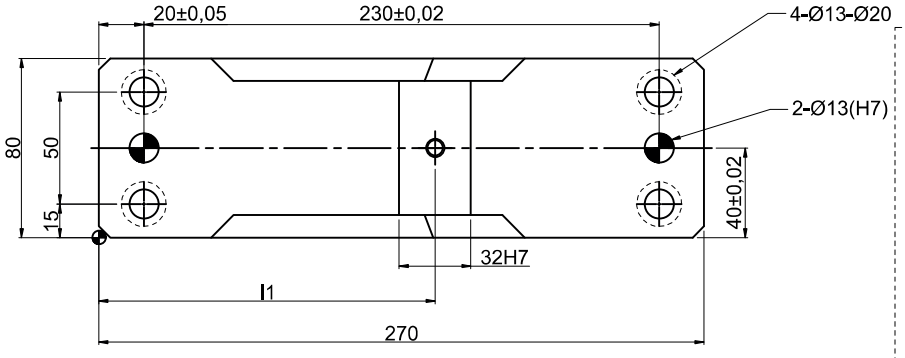

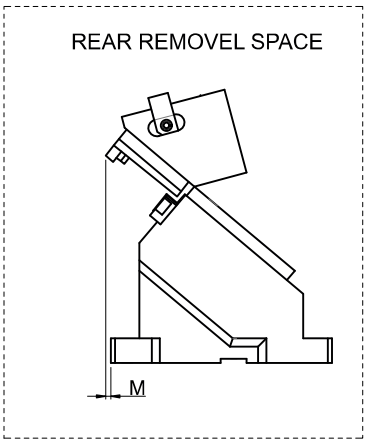

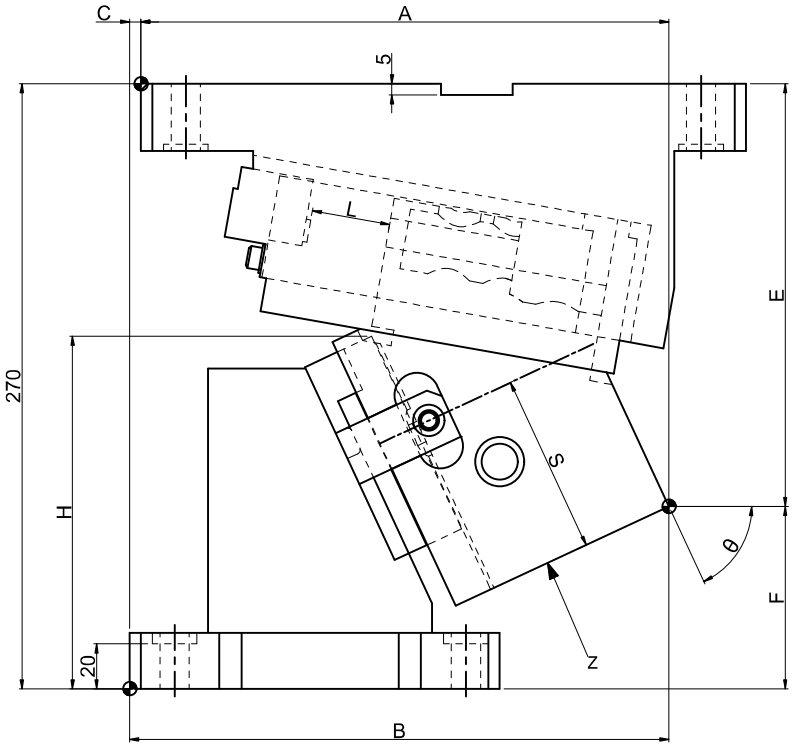

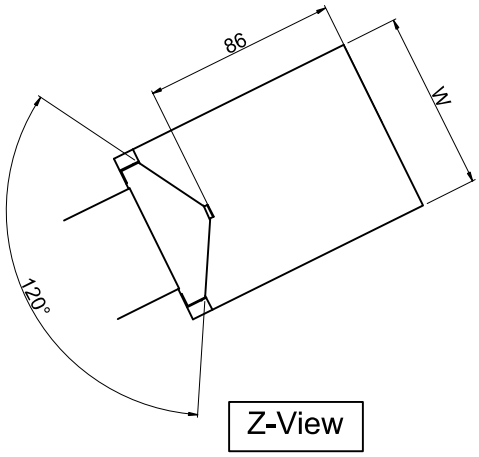

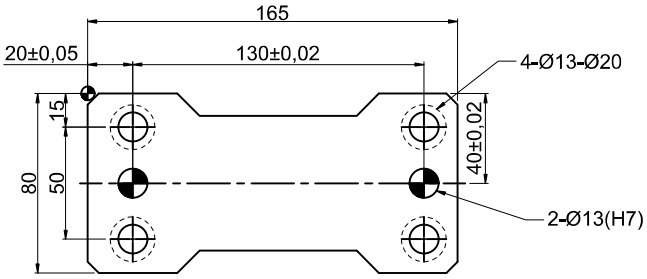

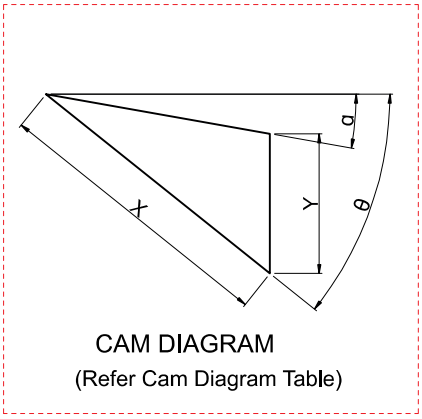

Cam Unit - PCU - CS2.1-80-(60-70)

Cam Dimensions											Cam Diagram		
W	θ	A	B	C	E	F	H	L	l1	M	X	Y	α
80	60°	240.64	240.64	0	176.59	93.41	157.7	50	170	75	98.5	76.6	10°
	65°	235.61	240.61	5	188.65	81.35	157.4	35		74	81.6	67.8	10°
	70°	227.83	237.83	10	195.53	74.47	157.1	30		75	86.4	76	10°

Spring Force									
Slide Stroke S	Working force KN (tonf)		Coil Spring load N (kgf)			Total weight kg	Catalog Code	W	θ
	Standard working force	Max. working force	Preload	5mm before bottom dead center	Max. load				
98.5	54.9(5.6)	109.8(11.2)	130(12.5)	2625(267.7)	3250(331.4)	23.2	PCU-CS2.1	80	60°
81.6			94(9.6)	2725(277.9)		23.7			65°
86.4			152(15.5)	2825(288.1)		23.9			70°

Order Type:- CODE-SIZE(W)-θ
Example:- PCU-CS2.1-80-65

Alternations-	
Option Code (OC)	Specifications
N12	Change dowel hole diameter ϕ13H7→ϕ12H7
N16	Change dowel hole diameter ϕ13H7→ϕ16H7
K	Add locating key (With 1 hexagon socket head cap screw M8x15
SC	Move forward mounting surface 0≦SC≦60 1mm increment
WC	Change the width of mounting surface W=80→W=100 or 120

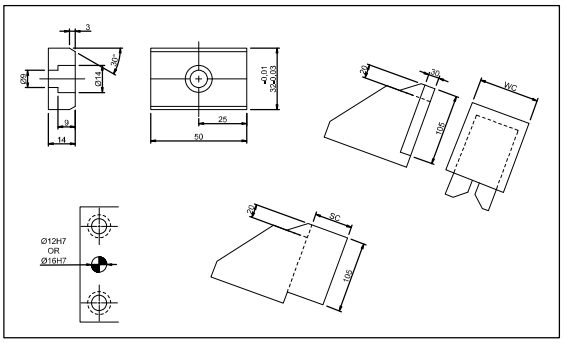

Order Type:- CODE-SIZE(W)-θ-OC
Example:- PCU-CS2.1-80-65-K