Cam Unit - PCU-CS8-200-(00-70)

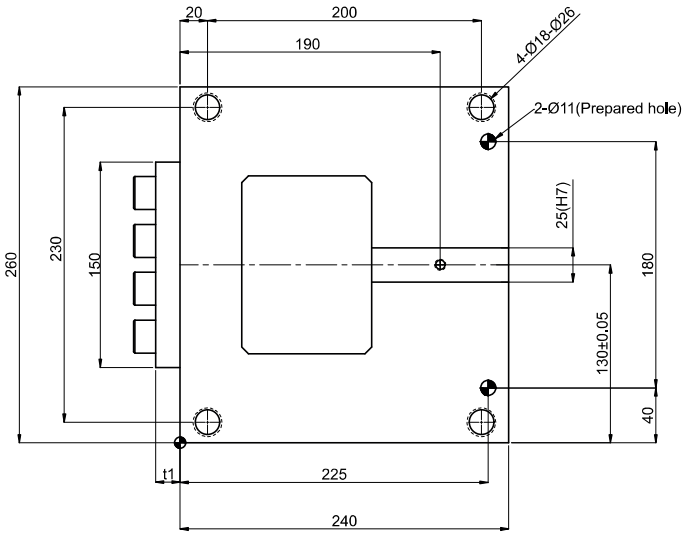

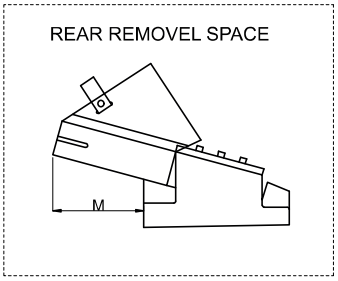

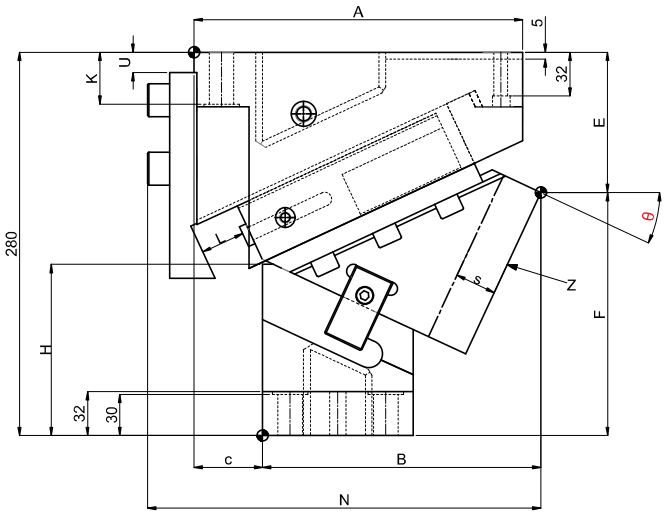

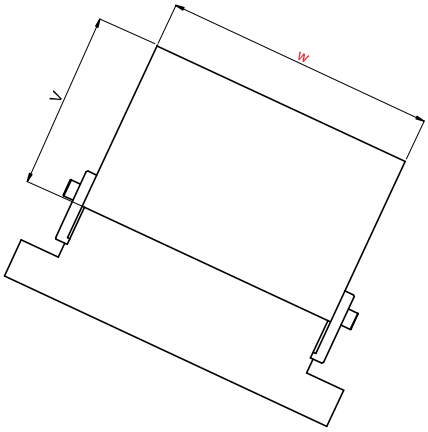

Z-View

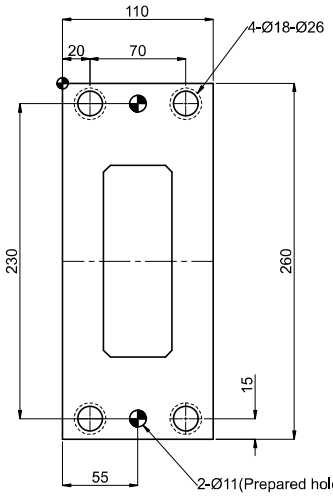

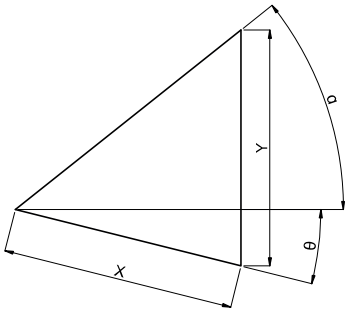

CAM DIAGRAM

(Refer Cam Diagram Table)

Cam Unit - PCU-CS8-200-(00-70)

Cam Dimensions															Cam Diagram		
W	θ	A	B	C	E	F	H	K	L	N	V	U	t1	M	X	Y	α
200	00°	240	180	60	90	190	90	38	40	273	100	60	17	83	28.3	28.3	45°
	05°	236.82	176.82		78.84	201.16	86.1			269.82	130				28.4	30.8	
	10°	240	180		90	190	120.2			273	100	35		95	33.3	28.7	35°
	15°	254.35	194.35		81.51	198.49	116			287.35	130				33.9	31.7	
	20°	240	190	50	110	170	130		32	274	100	15	18	115	30.9	24.1	25°
	25°	253.27	203.27		102.60	177.4	125			287.27	130				32	27	
	30°	240	210	30	110	170	150		30	273	120	10	17	126	33.5	24.5	15°
	35°	252.34	222.34		109.69	170.31				285.34	140				35.4	28.1	
	40°	240	210		115	165	160	20		273	120			130	39	27.7	5°
	45°	247.41	217.41		114.68	165.32				280.41	140				42.3	32.5	
	50°	240	230	10	120	160				272			16	132	46.7	35.8	0°
	55°		240	0	145	135	170								52.3	42.8	
	60°														60	52	
	65°						180		20						47.3	42.9	
	70°													142	58.5	54.9	

Spring Force									
Slide Stroke S	Working force KN (tonf)		Spring load N (kgf)			Total weight kg	Catalog No.	W	θ
	Standard working force	Max. working force	Preload	5mm before bottom dead center	Max. load				
28.3	98.1(10.0)	196.1(20.0)	630(64.2)	4775(487.0)	5670(578.2)	81.5	PCU-CS8	200	00°
28.4			294(30.0)	5152(525.4)	6182(630.4)	82.3			05°
33.3				5299(540.4)		75.7			10°
33.9				5314(541.9)		80.5			15°
30.9			353(36.0)	5080(518.0)	5998(611.6)	76.1			20°
32.0				5116(521.6)		80.1			25°
33.5				4851(494.7)	5645(575.6)	77.0			30°
35.4				4904(500.1)		80.9			35°
39.0				4974(507.3)		71.4			40°
42.3				5027(512.7)		74.7			45°
46.7	117.7(12.0)	235.4(24.0)		5080(518.0)		71.6			50°
52.3				5133(523.4)		78.6			55°
60.0				5204(530.6)		73.9			60°
47.3			1104 (112.6)	5056(515.6)	5520(562.9)	77.2			65°
58.5				5145(524.6)		72.2			70°

Order Type:- CODE-SIZE(W)-θ
Example:- PCU-CS8-200-10

Option Code (OC)	Specifications
HK	Finish dowel hole on holder Only 10, 12 or 13 can be specified ϕ 9(Prepared hole) →ϕ10H7,ϕ12H7 or ϕ13H7
DK	Finish dowel hole on driver Only 10, 12 or 13 can be specified ϕ 9(Prepared hole) →ϕ10H7,ϕ12H7 or ϕ13H7
HDK	Finish dowel hole on driver & holder Only 10, 12 or 13 can be specified ϕ 9(Prepared hole) →ϕ10H7,ϕ12H7 or ϕ13H7
K	Add locating key (With 1 hexagon socket socket head cap screw M8 X 15)
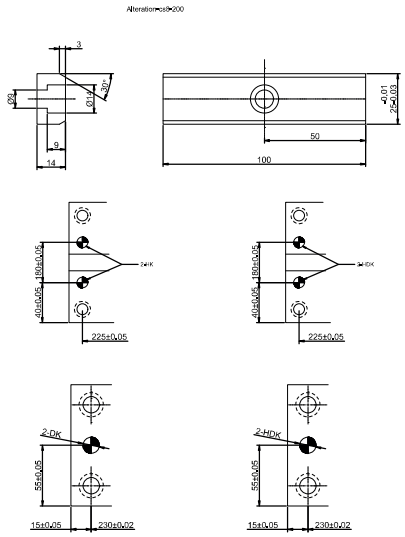
Order Type:- CODE-SIZE(W)-θ-OC
Example:- PCU-CS8-200-10-K